PROJECT:	LA CROSSE COUNTY SOLAR HOT WATER PROJECTS- LAKEVIEW HEALTH CENTER
LOCATION:	WEST SALEM, WI
ITEM: SPECIFICATION:	HEAT EXCHANGER
DESCRIPTION:	
Heat Exchanger	AIC L-Line - LB31-60X Brazed Plate Heat Exchanger
INSTALLER:	Hooper Corporation 2030 Pennsylvania Ave. Madison, WI 53706
CONTACT:	Mike Peterson
PHONE:	(608) 249-0451 ext. 130
FAX:	(608) 249-7360
WARRANTY & CERTIFICATE:	One year parts and labor warranty (Unless specified otherwise by manufacturer)

LB31 Series BRAZED PLATE HEAT EXCHANGERS

Single Wall Copper Brazed

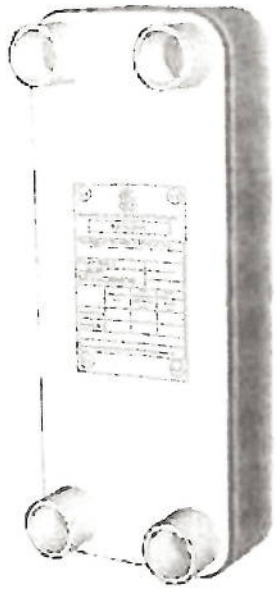

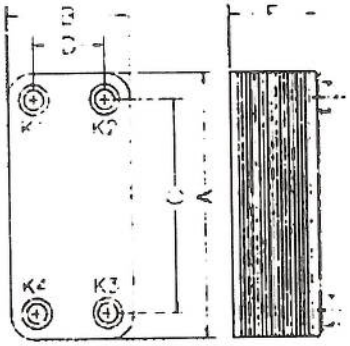

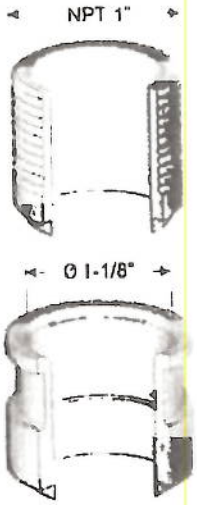

Standard Connections	Solder	Threaded NPT
LB31	1-1/8"	1"

Port Designations			
K1	K4	K2	K3
Inlet	Outlet	Outlet	Inlet
Fluid 1	Fluid 1	Fluid 2	Fluid 2

Dimensions are in Inches

Model	A	B	C	D	F	Volume (gal)	HTA (sq.ft.)	Est. Ship. Wt (Lbs)
LB31-10X	12.0	5.0	9.8	2.8	1.39	0.14	3.4	8.3
LB31-20X	12.0	5.0	9.8	2.8	2.29	0.28	6.8	11.8
LB31-30X	12.0	5.0	9.8	2.8	3.19	0.42	10.2	15.3
LB31-40X	12.0	5.0	9.8	2.8	4.09	0.56	13.6	19.8
LB31-50X	12.0	5.0	9.8	2.8	4.99	0.70	17.0	22.3
LB31-60X	12.0	5.0	9.8	2.8	5.89	0.84	20.4	25.8
LB31-70X	12.0	5.0	9.8	2.8	6.79	0.98	23.8	29.3
LB31-80X	12.0	5.0	9.8	2.8	7.69	1.12	27.2	32.8
LB31-90X	12.0	5.0	9.8	2.8	8.59	1.26	30.6	36.3
LB31-100X	12.0	5.0	9.8	2.8	9.49	1.40	34.0	39.8

Materials Of Construction	
Heating Plates	ANSI 316 – Single Wall
Pressure Plates/ Connections	Stainless Steel
Brazing Material	Copper

Optional Connections				
Threaded				
Male	1-1/4"			
Female	1/2"	3/4"	1"	
Solder	1/2"	5/8"	7/8"	1-3/8"

Max Flow	Design Parameters		
(USGPM)	Design Pressure (PSI)	Design Temperature (F)	Test Pressure (PSI)
77	413	302	824

- Dimensions subject to change without notice.
- Contact AIC for certified drawings
- This product is UL listed
- Not suited for ammonia, steam, and highly chlorinated water
- Not suited for pool/spa applications
- Not suited for pulsating pressures

* ASME certified units available upon request.
Contact AIC for further Information.

2899 Portland Drive
Oakville, Ontario
L6H 5S4 Canada
T: 905-829-4666, F: 905-829-4646

DATE: 9/14/2010
PROJECT: La Crosse Lakeview
CONTACT: 50 Glycol
COMPANY:
CALC. NO.:
PREPARED BY:

HEAT EXCHANGERS CALCULATION SHEET

PROJECT DATA SHEET

Heat Load	107736.96 BTU/h	
LMTD	21.5 deg. F	
Min. Oversizing	0 %	
	Hot Side	**Cold Side**
Fluid	glycol_(propylene)_50 %	water
Inlet Temperature	120.00 deg. F	82.00 deg. F
Outlet Temperature	105.00 deg. F	100.00 deg. F
Mass Flow	8169.01 lb/h	5981.51 lb/h
Inlet Volume Flow	16.00 USGal/min	11.97 USGal/min
Outlet Volume Flow	15.92 USGal/min	12.00 USGal/min
Max. Pressure Drop	14.50 psi	14.50 psi

HEAT EXCHANGER SELECTION

Heat Exchanger Type	LB31 - 60	
# of Units Parallel	1.00	
Heat Transfer Area	20.4 ft2	
Fouling Factor	0.0019 ft2hf/BTU	
OHTC Clean	516.3 BTU/ft2hf	
OHTC Fouling	264.0 BTU/ft2hf	
Oversize	95.6 %	
	Hot Side	**Cold Side**
Calculated Pressure Drop	1.92 psi	0.98 psi
Heat Transfer NTU	-	-

PHYSICAL PROPERTIES

	Hot Side	**Cold Side**
Fluid	glycol_(propylene)_50 %	water
Pressure	100.0 psig	100.0 psig
Reference Temperature	112.5 deg. F	91.0 deg. F
Density	63.812 lb/ft3	62.213 lb/ft3
Heat Capacity	0.879 BTU/lbF	1.001 BTU/lbF
Thermal Conductivity	0.218 BTU/fthF	0.353 BTU/fthF
Dynamic Viscosity	2.401 cP	0.756 cP

Dimensions: mm (inches), NP = 'Number of Plates'

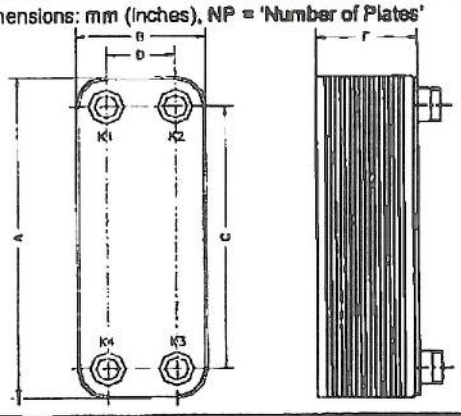

A	B	C	D	F	K1	K2	K3	K4
306 (12.0)	126 (5.0)	248.8(9.8)	69.8(2.75)	12.4 + 2.4NP(0.49+ 0.09NP)	1"	1"	1"	1"

Specifications and dimensional data shall be used as guidelines and may change without notice.
For guaranteed performance, please verify selections with the manufacturer.

2899 Portland Drive
Oakville, Ontario
L6H 5S4 Canada
T: 905-829-4666, F: 905-829-4646

DATE: 9/14/2010
PROJECT: La Crosse Lakeview
CONTACT: 30 Glycol
COMPANY:
CALC. NO.:
PREPARED BY:

HEAT EXCHANGERS CALCULATION SHEET

PROJECT DATA SHEET

Heat Load	114919.92 BTU/h	
LMTD	21.5 deg. F	
Min. Oversizing	0 %	
	Hot Side	**Cold Side**
Fluid	glycol_(propylene)_30 %	water
Inlet Temperature	120.00 deg. F	82.00 deg. F
Outlet Temperature	105.00 deg. F	100.00 deg. F
Mass Flow	8096.91 lb/h	6380.30 lb/h
Inlet Volume Flow	16.00 USGal/min	12.77 USGal/min
Outlet Volume Flow	15.92 USGal/min	12.80 USGal/min
Max. Pressure Drop	14.50 psi	14.50 psi

HEAT EXCHANGER SELECTION

Heat Exchanger Type	LB31 - 60	
# of Units Parallel	1.00	
Heat Transfer Area	20.4 ft2	
Fouling Factor	0.0021 ft2hf/BTU	
OHTC Clean	666.9 BTU/ft2hf	
OHTC Fouling	281.6 BTU/ft2hf	
Oversize	136.8 %	
	Hot Side	**Cold Side**
Calculated Pressure Drop	1.73 psi	1.11 psi
Heat Transfer NTU	-	-

PHYSICAL PROPERTIES

	Hot Side	**Cold Side**
Fluid	glycol_(propylene)_30 %	water
Pressure	100.0 psig	100.0 psig
Reference Temperature	112.5 deg. F	91.0 deg. F
Density	63.25 lb/ft3	62.213 lb/ft3
Heat Capacity	0.946 BTU/lbF	1.001 BTU/lbF
Thermal Conductivity	0.274 BTU/fthF	0.353 BTU/fthF
Dynamic Viscosity	1.295 cP	0.756 cP

Dimensions: mm (inches), NP = 'Number of Plates'

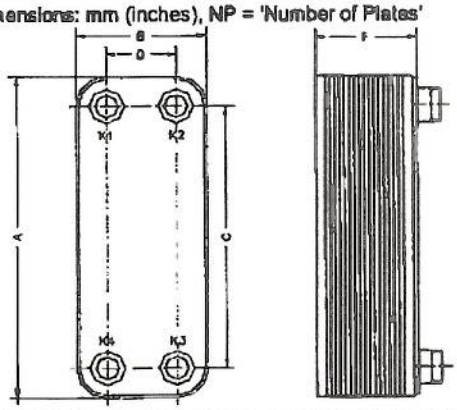

A	B	C	D	F	K1	K2	K3	K4
306 (12.0)	126 (5.0)	248.8(9.8)	69.9(2.75)	12.4 + 2.4NP(0.49+ 0.08NP)	1"	1"	1"	1"

Specifications and dimensional data shall be used as guidelines and may change without notice.
For guaranteed performance, please verify selections with the manufacturer.